MODIFIED EDISON SERIES

MOD-ED

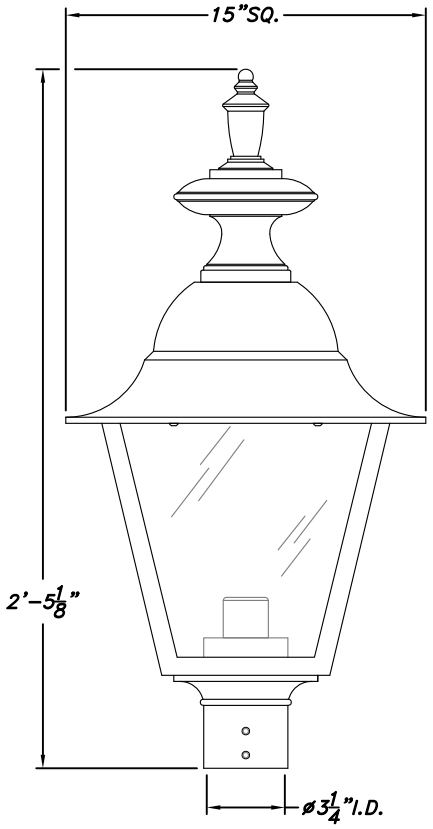

SCALE:1 1/2"=1'-0" E.P.A.=1.29 SQ.FT.

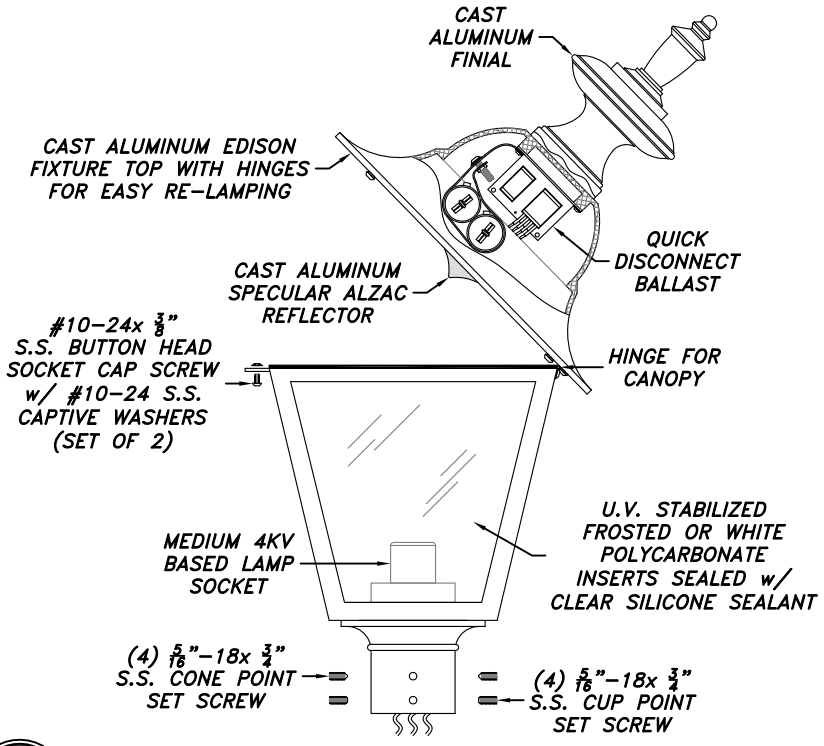

EXAMPLE

MOD-ED-PSMH-150-208-BLK

MOD-ED-_____-_____-_____-_____-_____
Series Ballast Wattage Voltage Color

INSERTS	LIGHT SOURCE	WATTAGE		VOLTAGE		COLOR OF POWDER COAT FINISH	
❑ FROSTED (CLEAR)	❑ INC	❑ 50w	❑ 150w	❑ 120v	❑ MULTI TAP 120v 240v 208v 277v	❑ (BLK) BLACK	❑ (HG) HAND BRUSHED GREEN
❑ WHITE (MILKY)	❑ CFL	❑ 70w	❑ 175w	❑ 208v	PLEASE SPECIFY VOLTAGE	❑ (BRZ) BRONZE	❑ (HR) HAND BRUSHED GRAY
	❑ HPS	❑ 100w		❑ 240v		❑ (GRN) GREEN	❑ CUSTOM _____
	❑ PSMH			❑ 277v			
	❑ LED			❑ 480v			

LUMINAIRE SPECIFICATION

HOUSING
The post top shall be core cast aluminum. Aluminum shall be certified as pure #356 alloy, free of any porosity, foreign materials or cosmetic fillers. Castings shall be uniform wall thickness with no warping or mold shifting. Minimum wall thickness shall be 3/16". Electrical components are mounted in the ballast canister. The ballast canister shall be mounted in the post top with three stainless steel screws. The optional refractor will be a borosilicate glass refractor designed for either a type III or type V light distribution pattern.

ELECTRICAL
All electrical components and materials shall be UL-recognized and wired by a certified UL technician. All Niland ballasts are high power factor rated for -30°C/-20°F starting. Medium base sockets are 4 KV rated. The electrical assembly is prewired with quick disconnects for servicing. Fixture shal be UL certified for wet locations.

MOUNTING
Fixture shall be mounted to ø3"O.D.x3"H. tenon with stainless steel allen head set screws (8 @ 90°)

RELAMPING
The lamp is accessed by loosening the (2) Button Head Cap Screw that are mounted to hinged luminarie lid.

FINISH
Fixture finish shall consist of degreasing, phosphate acid etching with 140°+ deionized water, rinsed, oven dry off and top coated with a thermoset TGIC super polyester powder coat finish designed not to chalk or fade for many years. All Niland Company powders must pass a minimum 3000-hour salt spray test for corrosion resistance.

CERTIFICATION
The Fixture shall be UL-Listed for wet location use, and all HID listings.

WARRANTY
Fixture shall be warranted to be free of defects for five years. Ballast components shall carry the ballast manufacturers limited warranty of two years.

PHOTOMETRICS
Complete photometric data for all fixtures is available in IES-formatted 3.5 disks. A certified independent laboratory performs all testing. Call the Niland Company directly for more information.

Catalog Name: MOD-ED Date: 02.15.18
Revision History: N/A Revision #: 0

Niland Approval: Luis M.Gomez Customer Approval: _____ Page: 3 of 3

Niland Company

NILAND COMPANY • PH: (915) 779-1405 • FAX: (915) 779-3618 • E-MAIL: INFO@NILANDCO.COM
320 N. Clark El Paso, Tx 79905 • PH: 800-648-9013 • FAX: 888-779-3065 • WEB PAGE: HTTP://www.nilandco.com