INDIANA SERIES

IN-FP-107

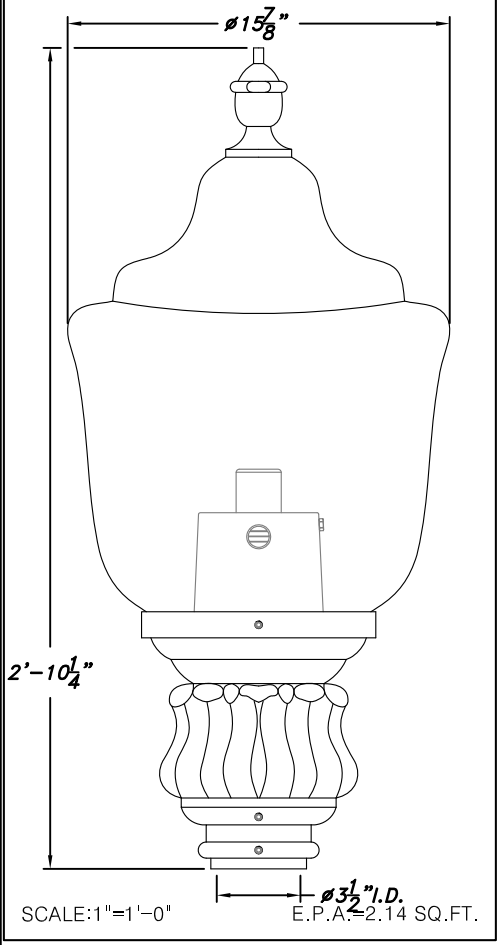

SCALE:1"=1'-0" E.P.A.=2.14 SQ.FT.

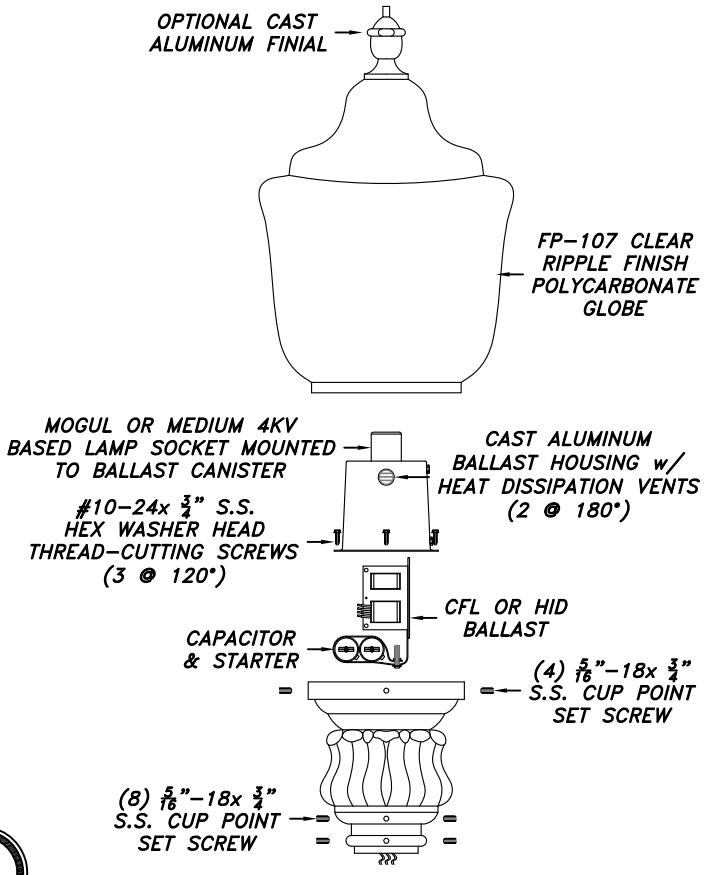

EXAMPLE

IN-FP-107-PSMH-150-208-BLK

IN-FP-107-_____-_____-_____-_____-_____

Series Globe Ballast Wattage Voltage Color

GLOBE	LIGHT SOURCE	WATTAGE-SOCKET MEDIUM	WATTAGE-SOCKET MOGUL	VOLTAGE		COLOR OF POWDER COAT FINISH	
❑ FROSTED (CLEAR)	❑ INC	❑ 50w		❑ 120v	❑ MULTI TAP 120v 240v 208v 277v	❑ (BLK) BLACK	❑ (HG) HAND BRUSHED GREEN
❑ WHITE (MILKY)	❑ CFL	❑ 70w		❑ 208v	PLEASE SPECIFY VOLTAGE	❑ (BRZ) BRONZE	❑ (HR) HAND BRUSHED GRAY
	❑ HPS	❑ 100w	❑ 250w	❑ 240v		❑ (GRN) GREEN	❑ CUSTOM _____
	❑ PSMH	❑ 150w		❑ 277v			
	❑ LED	❑ 175w		❑ 480v			

LUMINAIRE SPECIFICATION

HOUSING

The post top shall be core cast aluminum. Aluminum shall be certified as pure #356 alloy, free of any porosity, foreign materials or cosmetic fillers. Castings shall be uniform wall thickness with no warping or mold shifting. Minimum wall thickness shall be 3/16". Electrical components are mounted in the ballast canister. The ballast canister shall be mounted in the post top with three stainless steel screws. A optional refractor will be a upgrade refractor globe or borosilicate glass refractor designed for either a type III or type V light distribution pattern.

ELECTRICAL

All electrical components and materials shall be UL-recognized and wired by a certified UL technician. All Niland ballasts are high power factor rated for -30°C/-20°F starting. Medium and Mogul base sockets are 4 KV rated. The electrical assembly is prewired with quick disconnects for servicing. Fixture shal be UL certified for wet locations.

MOUNTING

Fixture shall be mounted to ø3"O.D.x3'H. tenon with stainless steel allen head set screws (8 @ 90°)

RELAMPING

The globe is removed by loosening (4) S.S. Allen Head Screws on fitter.

FINISH

Fixture finish shall consist of degreasing, phosphate acid etching with 140°+ deionized water, rinsed, oven dry off and top coated with a thermoset TGIC super polyester powder coat finish designed not to chalk or fade for many years. All Niland Company powders must pass a minimum 3000-hour salt spray test for corrosion resistance.

CERTIFICATION

The Fixture shall be UL-Listed for wet location use, and all HID listings.

WARRANTY

Fixture shall be warranted to be free of defects for five years. Ballast components shall carry the ballast manufacturers limited warranty of two years.

PHOTOMETRICS

Complete photometric data for all fixtures is available in IES-formatted 3.5 disks. A certified independent laboratory performs all testing. Call the Niland Company directly for more information.

Catalog Name: IN-FP-107 Date: 03.21.18

Revision History: N/A Revision #: 0

Niland Approval: Luis M.Gomez Customer Approval: _____ Page: 3 of 3

Niland Company

NILAND COMPANY • PH: (915) 779-1405 • FAX: (915) 779-3618 • E-MAIL: INFO@NILANDCO.COM

320 N. Clark El Paso, Tx 79905 • PH: 800-648-9013 • FAX: 888-779-3065 • WEB PAGE: HTTP://www.nilandco.com