CORE CAST
NILAND-17 SERIES

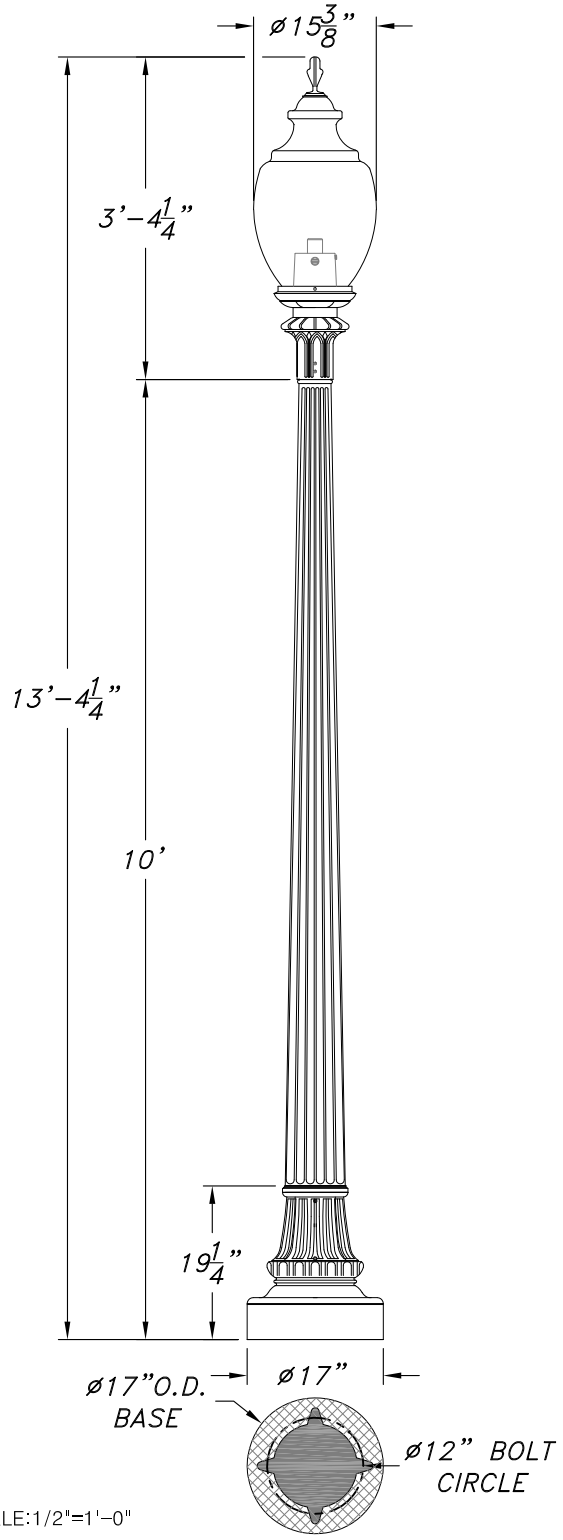

SCALE:1/2"=1'-0"

Catalog Name:

CCN-17-CITF-10-CP-5015

CSI POLE SPECIFICATION

I. BASE/POLE

Base/pole shall be one piece cast iron. Iron shall be certified as pure 356 copper free of an porosity, foreign materials or cosmetic fillers certified ASTN A48, Class 30 iron. Base/pole casting shall be of uniform wall thickness with no warping or mold shifting. Minimum wall thickness shall be .250". Cast iron access cover shall be secured with two to four stainless steel screws. The anchor bolts locationed in the base shall be cast in place as part of the base casting, for maximum strength.

II. ANCHORAGE DETAIL

Standard 3/4" x 24" L-type bolts shall be used for installation.

III. HOUSING

The post top shall be core cast aluminum. Aluminum shall be certified as pure #356 alloy, free of any porosity, foreign materials or cosmetic fillers. Castings shall be uniform wall thickness with no warping or mold shifting. Minimum wall thickness shall be 3/16". Electrical components are mounted in the ballast canister. The ballast canister shall be mounted in the post top with three stainless steel screws. A optional refractor will be a upgrade refractor globe or borosilicate glass refractor designed for either a type III or type V light distribution pattern.

IV. ELECTRICAL

All electrical components and materials shall be UL-recognized and wired by a certified UL technician. All Niland ballasts are high power factor rated for -30°C/-20°F starting. Medium and Mogul base sockets are 4 KV rated. The electrical assembly is prewired with quick disconnects for servicing. Fixture shal be UL certified for wet locations. Optional LED unit.

FINISHES

Five Year Powder Coating Warranty

Niland Company factory-applied powder coatings are warranted against peeling, excessive fading and cracking under normal climatic exposure for a period of five years from date of shipment. Damage to finish coating caused by abuse or mishandling during installation is not covered by warranty. This warranty is limited to the repair or replacement of the material involved and does not included reimbursement of consequential expenses such as installation or removal of equipement or transportation costs.

I. STANDARD FINISH

Satin iron achieved by rotary sanding, blasting and phosphate conversion coating.

II. THERMOSET POWDER PAINT FINISH

Pretreatment shall consist of degreasing phosphate acid-etching with 140° and de-ionizing water, rinsed and oven dried.

FINISH COAT

Thermoset TGIC super polyester powder coat finish electrostatically applied, oven cured and bonded at approximately 420° F to a minimum dry film thickness of 1.6 mils. All Niland powders must pass a minumum 3000-hour salt-spray test for corrosion resistance. The National Association of Architectural Metal Manufacturers, Metal Finishes Manual rates the outdoor life of these powders at 15-plus years.

III. LIQUID FINISH

Optional liquid finish is first prime coated then finished with a two part liquid epoxy coat.

WARRANTY

Niland Company warrants to repair or replace, at our option, any equipment that fails due to defects in material or workmanship within one year from date of shipment. This warranty does not include failures as a result of improper installation, mishandling or misapplication. This guarantee is limited to repair or replacement only and does not include reimbursement for expense of installation, removal of equipment, transportation or any other expenses that may be incurred. Authorization must be obtained from Niland Company in El Paso, Texas before any material is returned.

Revision #: 0 Date: 02.15.18 Page: 1 of 3

Revision History: N/A

Niland Approval: Luis M. Gomez Customer Approval:

Niland Company

NILAND COMPANY • PH: (915) 779-1405 • FAX: (915) 779-3618 • E-MAIL: INFO@NILANDCO.COM
320 N. Clark El Paso, Tx 79905 • PH: 800-648-9013 • FAX: 888-779-3065 • WEB PAGE: HTTP://www.nilandco.com

CCN-17 SERIES

CAST POLE& BASE

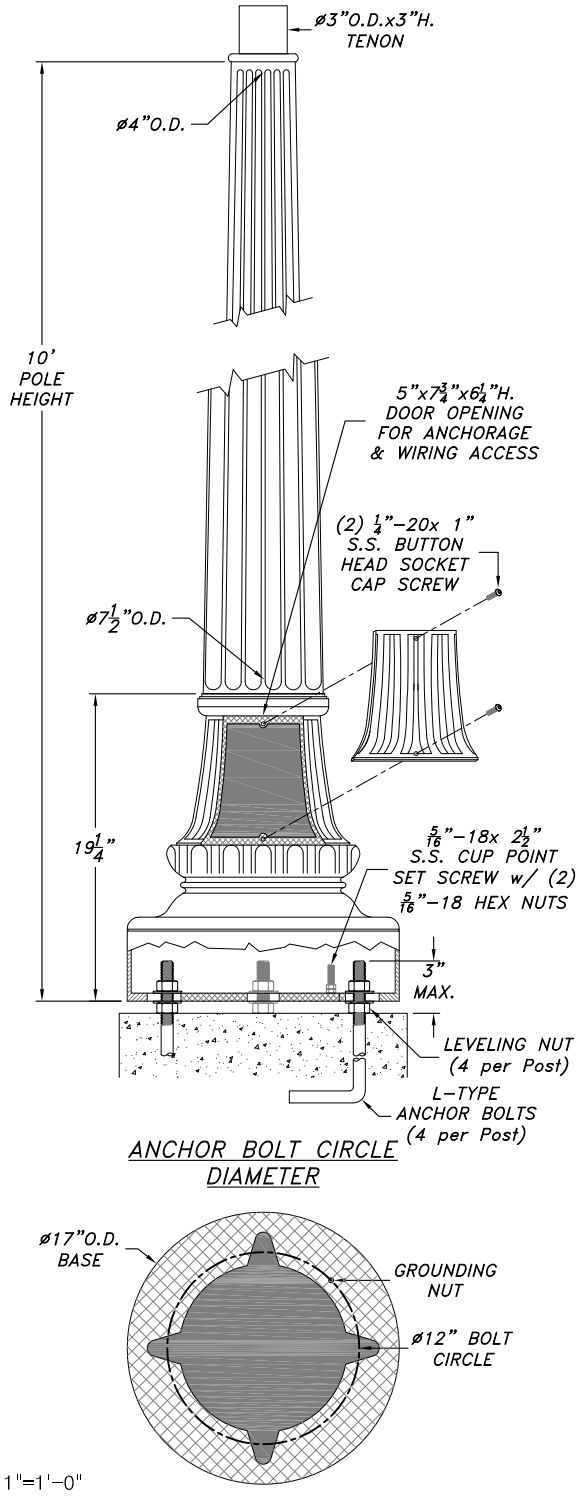

SCALE:1"=1'-0"

Core Cast Niland Series-17" Base-Cast Iron Tapered Fluted 4"to7.5"-10' Height

CCN-17-CITF-10

ORDERING GUIDE

Catalog Code Description: CCN-17-C_TF-ht-top-globe

Name of Base (Core Cast Niland);Diameter of Base (17")
Type of Pole (Tapered Fluted); Height of Pole (None)
Top Style (None);Color (None); Optional Equip. (None)

Post Selection:

Specify pole height from bottom of base.

Catalog Code	Shaft Type	Height
CCN-17-CATF-_	4"-7.5" tapered-fluted	10'& 12'
CCN-17-CITF-_	4"-7.5" tapered-fluted	10'& 12'

Check Appropriate Boxes for Material

❑-Cast Aluminum ■-Cast Iron

Shaft Options

■- 1/4" Extrusion

■-

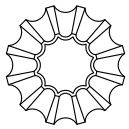

4"-7.5" Dia./ N.T.S.

Optional Pole Accessories

❑-GFI Receptacles (See Accessories Section)
❑-Banner Arms (See Accessories Section)
❑-Flag Pole Holders (See Accessories Section)
❑-Signage (See Accessories Section)

Check Appropriate Boxes for Finish

❑-Black ❑-Hand Brushed Green
❑-Bronze ❑-Hand Brushed Gray
❑-Green ❑-Custom _____

Ordering Instructions

To order, simply follow the format for the Catalog Code. Once the base has been selected, use the base initials to begin your catalog code. The next entry on the code is the diameter of the base. Next, you will choose the type of pole that the product will have whether it is smooth, fluted, tapered fluted etc. The height of the pole is next and it is measured from the bottom of the base. The post top style is next and followed by the globe type. Codes can be found under each item.
The code description is:
Base Series-Diameter-Pole Shaft-Height-Top-Globe.

Catalog Name:CCN-17-CITF-10-CP-5015 Date: 02.15.18
Revision History:N/A Revision #: 0

Niland Approval:Luis M.Gomez Customer Approval:_____ Page: 2 of 3

Niland Company
NILAND COMPANY • PH: (915) 779-1405 • FAX: (915) 779-3618 • E-MAIL: INFO@NILANDCO.COM
320 N. Clark El Paso, Tx 79905 • PH: 800-648-9013 • FAX: 888-779-3065 • WEB PAGE: HTTP://www.nilandco.com

CAPITOL SERIES

CP-5015

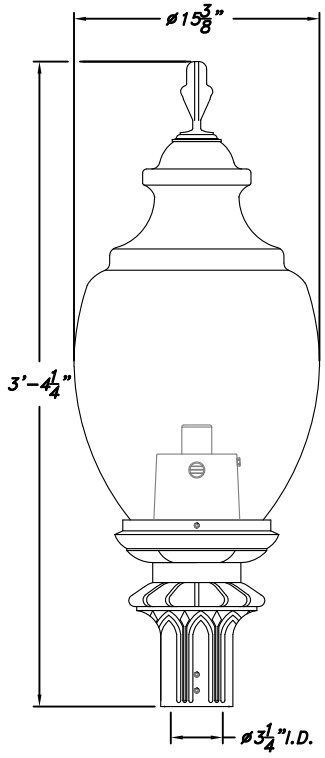

SCALE:1"=1'-0" E.P.A.=2.53 SQ.FT.

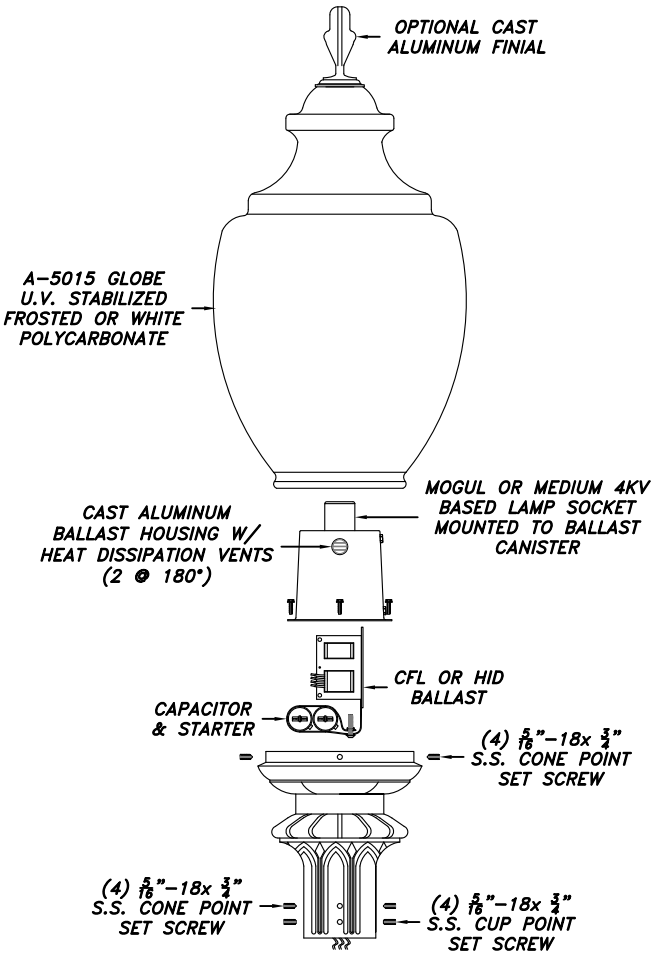

EXAMPLE

CP-5015-PSMH-150-208-BLK

CP-5015-_____-_____-_____-_____-_____

Series Globe Ballast Wattage Voltage Color

GLOBE	LIGHT SOURCE	WATTAGE-SOCKET MEDIUM	WATTAGE-SOCKET MOGUL	VOLTAGE		COLOR OF POWDER COAT FINISH	
❑ FROSTED (CLEAR)	❑ INC	❑ 50w		❑ 120v	❑ MULTI TAP 120v 240v 208v 277v	❑ (BLK) BLACK	❑ (HG) HAND BRUSHED GREEN
❑ WHITE (MILKY)	❑ CFL	❑ 70w		❑ 208v	PLEASE SPECIFY VOLTAGE	❑ (BRZ) BRONZE	❑ (HR) HAND BRUSHED GRAY
	❑ HPS	❑ 100w	❑ 250w	❑ 240v		❑ (GRN) GREEN	❑ CUSTOM _____
	❑ PSMH	❑ 150w		❑ 277v			
	❑ LED	❑ 175w		❑ 480v			

LUMINAIRE SPECIFICATION

HOUSING

The post top shall be core cast aluminum. Aluminum shall be certified as pure #356 alloy, free of any porosity, foreign materials or cosmetic fillers. Castings shall be uniform wall thickness with no warping or mold shifting. Minimum wall thickness shall be 3/16". Electrical components are mounted in the ballast canister. The ballast canister shall be mounted in the post top with three stainless steel screws. A optional refractor will be a upgrade refractor globe or borosilicate glass refractor designed for either a type III or type V light distribution pattern.

ELECTRICAL

All electrical components and materials shall be UL-recognized and wired by a certified UL technician. All Niland ballasts are high power factor rated for -30°C/-20°F starting. Medium and Mogul base sockets are 4 KV rated. The electrical assembly is prewired with quick disconnects for servicing. Fixture shal be UL certified for wet locations.

MOUNTING

Fixture shall be mounted to ø3"O.D.x3'H. tenon with stainless steel allen head set screws (8 @ 90°)

RELAMPING

The globe is removed by loosening (4) S.S. Allen Head Screws on fitter.

FINISH

Fixture finish shall consist of degreasing, phosphate acid etching with 140°+ deionized water, rinsed, oven dry off and top coated with a thermoset TGIC super polyester powder coat finish designed not to chalk or fade for many years. All Niland Company powders must pass a minimum 3000-hour salt spray test for corrosion resistance.

CERTIFICATION

The Fixture shall be UL-Listed for wet location use, and all HID listings.

WARRANTY

Fixture shall be warranted to be free of defects for five years. Ballast components shall carry the ballast manufacturers limited warranty of two years.

PHOTOMETRICS

Complete photometric data for all fixtures is available in IES-formatted 3.5 disks. A certified independent laboratory performs all testing. Call the Niland Company directly for more information.

Catalog Name: CCN-17-CITF-10-CP-5015 Date: 02.15.18

Revision History: N/A Revision #: 0

Niland Approval: Luis M.Gomez Customer Approval: _____ Page: 3 of 3

Niland Company

NILAND COMPANY • PH: (915) 779-1405 • FAX: (915) 779-3618 • E-MAIL: INFO@NILANDCO.COM

320 N. Clark El Paso, Tx 79905 • PH: 800-648-9013 • FAX: 888-779-3065 • WEB PAGE: HTTP://www.nilandco.com